83860 - SIDE TABLE MODERN NATURE

ITEM CODE: 83860 ITEM SIZE-: 53X 44 X 40 CM		
A		1
B		1
C		4
D		1

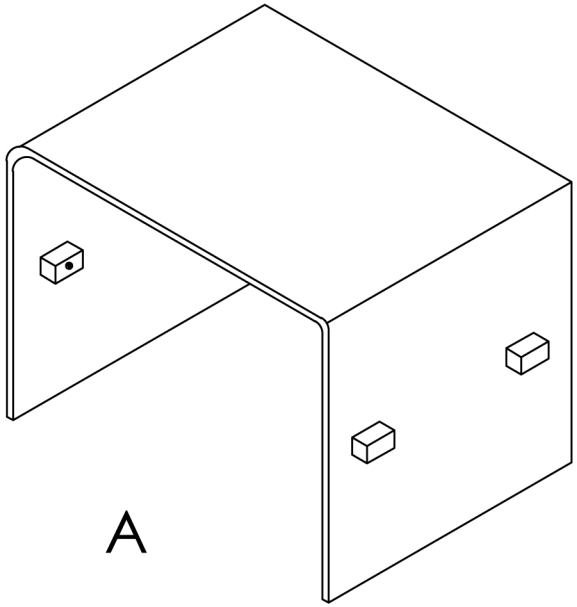

A

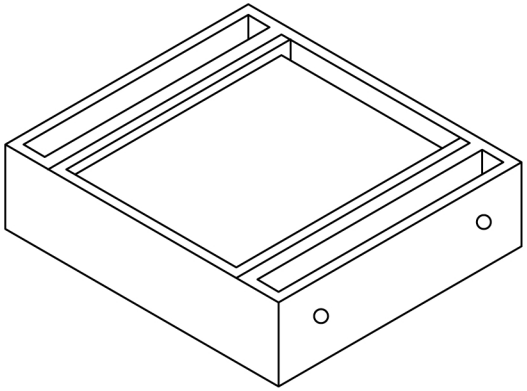

A+B

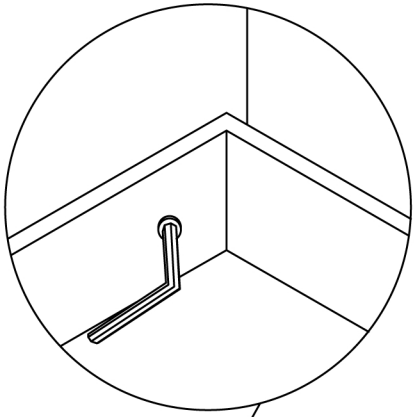

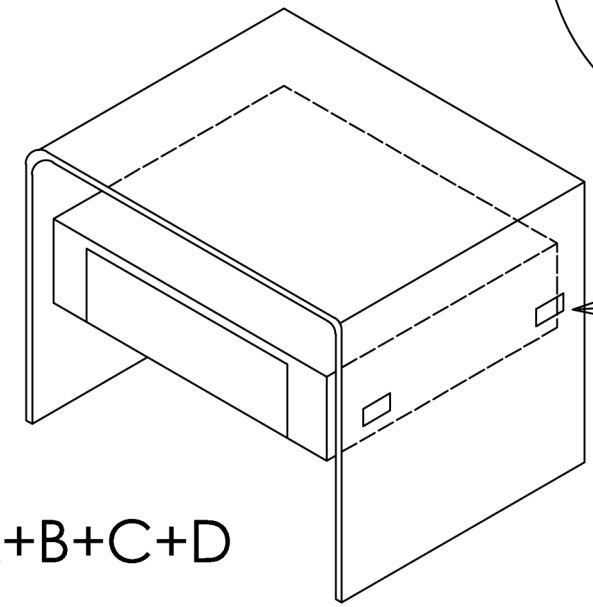
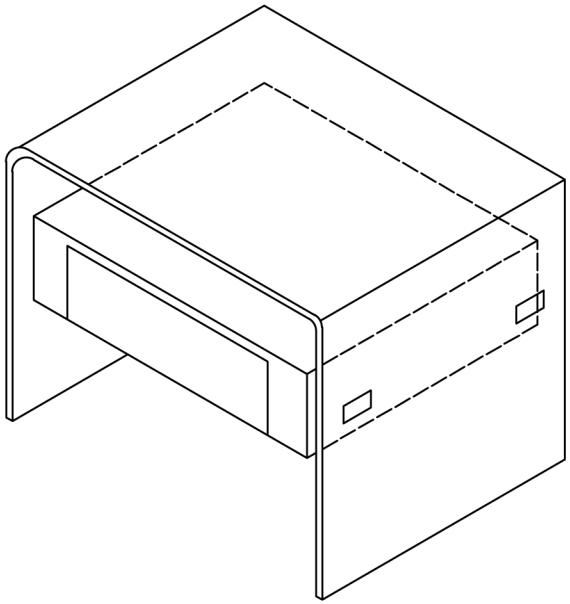
A+B+C+D